POST PRESS
MAILROOM
BOOKBINDERY

RS 830 / 831 - ROTARY TRIMMING LINE

RIMA SYSTEM

Requirements & Solutions

Whether head-, foot-, three- or four-side trimming - the RS 830 / RS 831 Trimming Line fits perfectly in all Post Press Systems. It integrates two trimming modules and a bump turn mounted on a compact and movable frame for the flexible application behind various folder deliveries. The machine is available with manual (RS 830) or automatic (RS 831) format adjustment.
Unique features like the infeed jogger with "Hexbrator Technology", "Integrated Knife Cooling" and " Zero Gap Adjustment" guarantee superior trimming quality, a long knife edge life and perfect run-out. The new "Multi Knife Technology" allows to operate the RS 830 / RS 831 with serrated carbide ring-knives (standard) and segmented knives (option). Easy knife switching guarantees total flexibility for every production. Highest reliability, low knife prices and inexpensive resharpening minimize the operation costs.

Technical Data:

Formats		RS 830		RS 831	
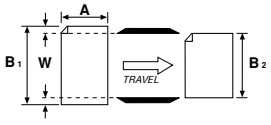		**min**	**max**	**min**	**max**
	"A"	114 mm (4.49")	530 mm (20.87")	114 mm (4.49")	530 mm (20.87")
	"B_1" before 1-side trim before 2-side trim	98 mm (3.86") 101 mm (3.98")	530 mm (20.87") 530 mm (20.87")	98 mm (3.86") 101 mm (3.98")	530 mm (20.87") 530 mm (20.87")
Waste paper (depends on product)	"W"	3 mm (0.12")	50 mm (1.97")	3 mm (0.12")	50 mm (1.97")
Product width (after trimming)	"B_2" after 1-side trim after 2-side trim	95 mm (3.74") 95 mm (3.74")	527 mm (20.75") 524 mm (20.63")	95 mm (3.74") 95 mm (3.74")	527 mm (20.75") 524 mm (20.63")
Product thickness	Single product Shingled stream	2 pages	128 pages 512 pages (max. 15 mm (0.59"))	2 pages	128 pages 512 pages (max. 15 mm (0.59"))
Speed (per stream)	adjustable		120.000 cph (80 m/min)		120.000 cph (80 m/min)
Product orientation	spine leading, spine to the side (in exceptional cases: spine trailing)				
Infeed /delivery height	800 mm (31.5"), others on request (600 mm (23.63") - 1200 mm (47.26"))				
Input power	400 V, 3~, N, PE, 12 kW (3 knives) / 14 kW (4 knives)				
Air requirement	200 l/min @ 6 bar (@ 87 psi) for bumpturn (basically no air consumption for trimmers)				
Suction capacity*	air quantity per suction nozzle: 900 m³/h, suction nozzle: 100 mm diameter, air speed: 31m/sec				
Options	coldset option, trimming lower knives, vacuum assisted bumpturn, JDF-integration (RS 831)				

Technical specification available upon request. The manufacturer reserves the right to change the technical specification without prior notice. (RS 830/831-EN-April 2012) * Non binding, minimum requirements

RS 830

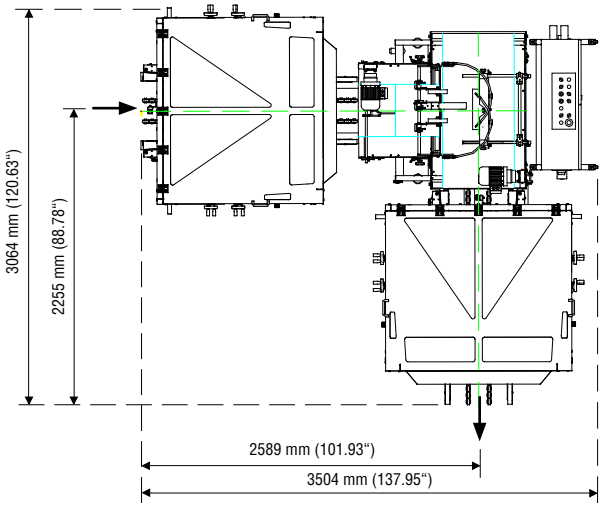

RS 831

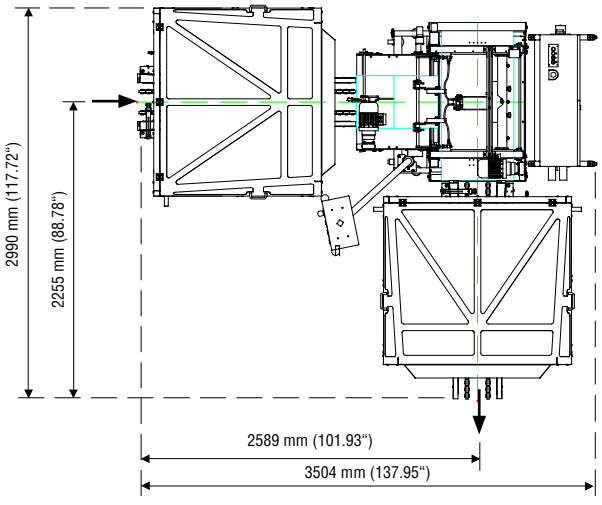

RIMA SYSTEM

www.rima-system.com

RIMA-SYSTEM Europe, Germany · RIMA-SYSTEM Atlanta LLC, USA · RIMA-SYSTEM Far East Pte Ltd, Singapore
RIMA-SYSTEM Corporate Office, USA · SYSTEM UK Ltd, United Kingdom · CIVIEMME-SYSTEM S.r.l., Italy